Fulton Electric Steam Boilers

From 12 to 1000 kW (1.2 to 100 BHP)

A complete line of packaged boilers (15 models) for efficient, quiet and safe operation for any commercial/industrial process application.

Built/certified in accordance to ASME Boiler and Pressure Vessel Code.
All Fulton Electric Steam Boilers are UL Approved.
1.2-15 BHP are CSA Approved.

November 2009

Fulton Electric Steam Boilers Are Efficient, Quiet, And Safe For Your Process Needs

Fulton manufactures a complete line of electric steam boilers from 12 kW to 1000 kW (1.2 to 100 BHP) up to 300 PSI for heating and process applications.

Fulton's vertical design is a full packaged steam boiler built to ASME specifications and applicable standards and codes. They are very efficient because the heating elements are totally immersed in water and the pressure vessel is fully insulated. Radiation losses are minimal. With a carefully calculated heat to steam ratio, operating pressures are achieved quickly with maximum efficiency. Electric boilers have no wasted fuel going out the stack as associated with fossil fuels, therefore, electric boilers are environmentally friendly. No NOx (nitrogen oxides) are being transmitted to the atmosphere.

Stainless steel heating elements
Fulton uses low watt density elements* made of stainless steel. Stainless will not melt or anneal as easily as copper elements. The small 12 to 36 kW boilers use horizontally mounted elements at the bottom.

*Consult factory for specific watt densities.

50 to 1000 kW elements mount vertically

Can be serviced and periodically maintained simply by unbolting the element(s) from the flanges in the top of the boiler's "head". Expansion and contraction of the top mounted elements cause scale to flake off and drop to the bottom of the boiler. Strategically located 3" x 4" handholes allow easy inspection and periodic clean-out maintenance.

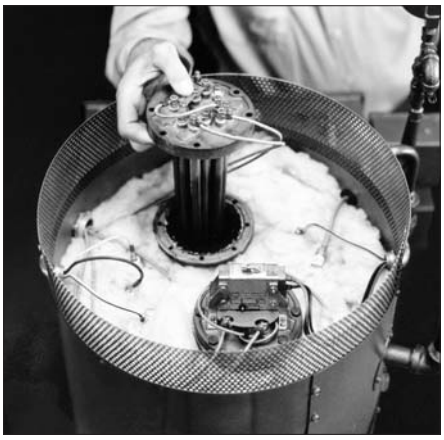

The element(s) are easily accessible--permit quick removal for service or inspection. Heating element thermostats are optional.

Features and advantages

- Nearly 100% efficient
- Quiet, clean
- No NOx emissions
- Ideal choice where fossil fuels are not available or where electricity rates are favorable
- Built to ASME Code and UL Approved
- Vertical design requires minimal floor space
- Completely wired control panel box located in front of the boiler.
- Safe. Solid state relays. All wiring meets NEC specifications.
- Second (auxiliary) low water water cut-off probe standard

Fulton can custom build completely piped and wired skid mounted units.

Save valuable time and expenses in the field by ordering complete skid mounted units ready for power and water hook up at the sight **Unit 1**- 50 kW (5 BHP) 600 PSIG steam boiler with dual level controls, skid-mounted, pre-piped with feed system and tandem feedwater preheaters. This unit is used for steam injection for pharmaceutical crystallization process.

Unit 2 - 36 kW (3.6 BHP) 15 PSIG electric steam boiler with 3 kW electric steam superheater skid mounted and pre- piped with return system and chemical feed system. Explosion proof, Class 1, Group C, D DN 1. All controls, instrumentation by Fulton including single source power connection. This unit is used for manufacturing/sterilization of surgical equipment.

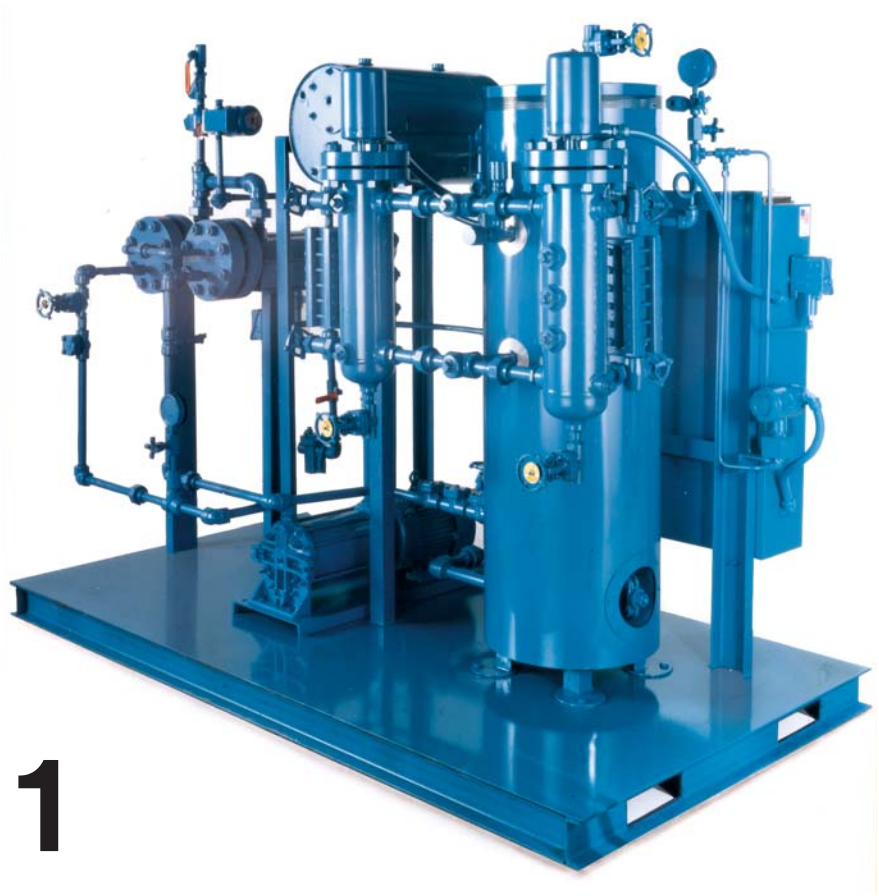

Component Locations of the Fulton 12 to 1000 kW (1.2 to 100 BHP) Steam Boilers

1. Pressure Vessel Is Built To ASME Code 5 Year Warranty
2. Electrical Control Panel Box
3. Electric Heating Elements
4. Low Water Cut Off Probe
5. Second (Auxiliary) Low Water Cut Off Probe
6. Pump "On" Probe
7. Pump "Off" Probe
8. Sight Glass Assembly
9. Operating Pressure Control
10. High Limit Pressure Control w/ manual reset
11. Steam Outlet
12. Safety Valve
13. Steam Gauge Assembly
14. Steam Pressure Gauge
15. High Temperature Insulation Surrounds The Pressure Vessel
16. Large (3" x 4") Easily Access Handholes
17. Feedwater Shut Off Valve
18. Blowdown Valve
19. Water Bottle Assembly For 300 to 1000 kW only

Note: Al l Fulton Electric Steam Boilers have a second (auxiliary) low water cut-off probe.

50 to 200 kW (5 to 20 BHP)

Elements are vertically mounted. All probes are mounted in the top of the boiler.

12 to 36 kW (1.2 to 3.6 BHP)

Element(s) are horizontally mounted at the bottom of the pressure vessel. All probes are located in the top of the boiler.

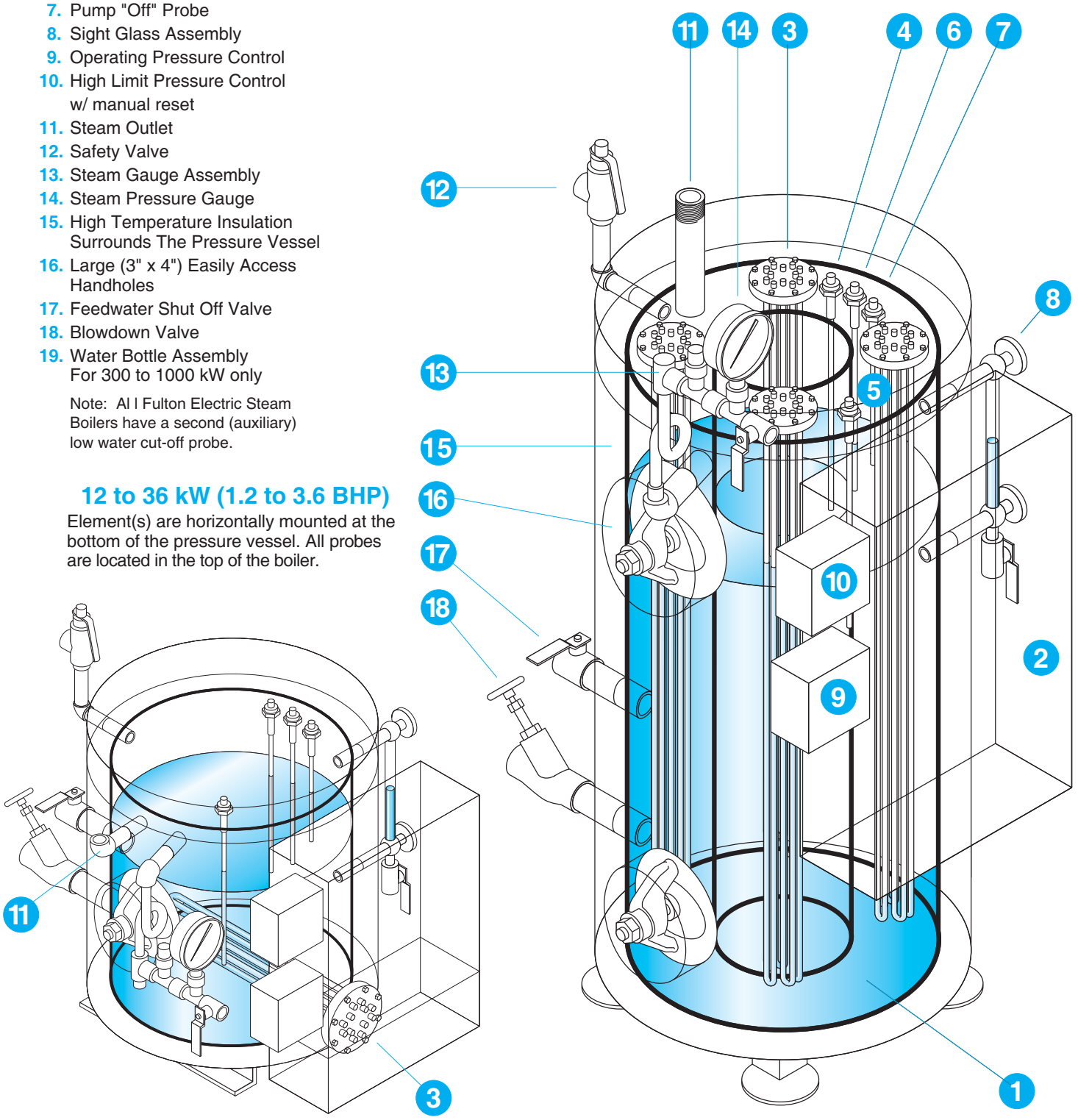

Note: All Fulton Electric Steam Boilers Have a second (auxiliary) low water cut-off probe.

300 to 1000 kW (30 to 100 BHP)

Elements are vertically mounted. These boilers have an externally mounted water bottle assembly housing the low water cut-off probe, pump on probe and pump off probe.The second (auxiliary) low water cut off probe is mounted in the top of the boiler.

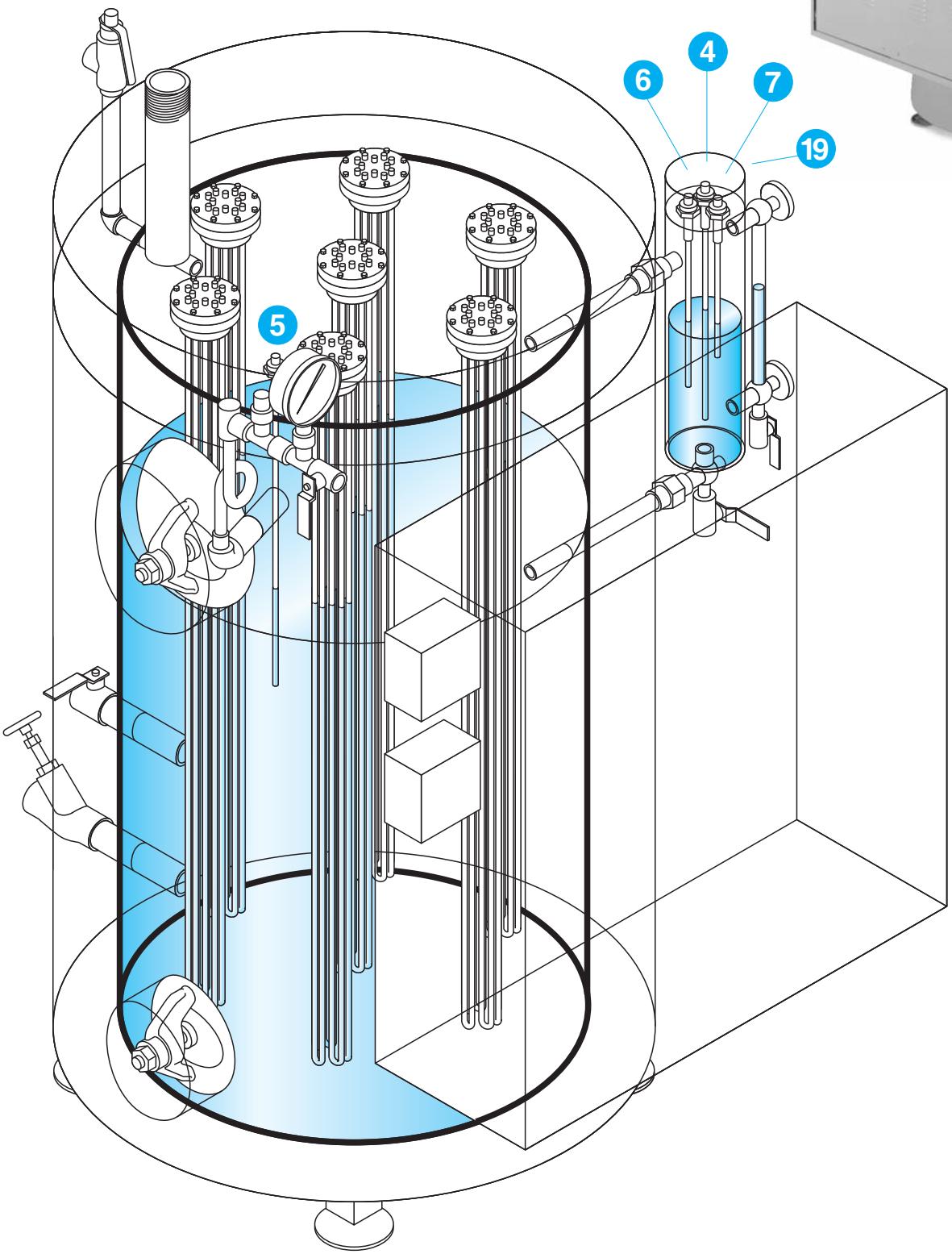

Dimensions

Model FB-L		012	015	018	024	030	036	050	075	100	150	200	300	500	750	1000
Unit Size:	kW	12	15	18	24	30	36	50	75	100	150	200	300	500	750	1000
	HP	1.2	1.5	1.8	2.4	3.0	3.5	5.0	7.5	10	15	20	30	50	75	100
Height																
(A) Boiler Overall	IN	24	24	24	24	24	24	55	55	55	55	55	75	75	75	75
	MM	610	610	610	610	610	610	1397	1397	1397	1397	1397	1905	1905	1905	1905
(B) Boiler w/Piping	IN	30	30	30	30	30	30	65	65	65	65	71	80	80	80	80
	MM	762	762	762	762	762	762	1651	1651	1651	1651	1803	2032	2032	2032	2032
(C) Feedwater Inlet	IN	8	8	8	8	8	8	16	16	16	16	16	24	24	24	24
	MM	203	203	203	203	203	203	406	406	406	406	406	610	610	610	610
(D) Blowdown Outlet	IN	4	4	4	4	4	4	6	6	6	6	6	6.5	6.5	6.5	6.5
	MM	102	102	102	102	102	102	152	152	152	152	152	165	165	165	165
(E) Electric Control Box	IN	20.5	20.5	20.5	20.5	20.5	20.5	50	50	50	50	48	64	64	64	64
	MM	521	521	521	521	521	521	1270	1270	1270	1270	1219	1626	1626	1626	1626
(F) Hand Hole	IN	11	11	11	11	11	11	38	38	38	38	38	55	55	55	55
	MM	279	279	279	279	279	279	965	965	965	965	965	1397	1397	1397	1397
Width & Depth																
(G) Boiler Only	IN	20	20	20	20	20	20	17	24	24	28	32	36	44	50	63
	MM	508	508	508	508	508	508	432	610	610	711	813	914	1118	1270	1600
(H) Overall Depth Electric	IN	30	30	30	30	30	30	35	35	35	39	46	46	56	62	83
Panel to Blowdown	MM	762	762	762	762	762	762	899	899	899	991	1168	1168	1442	1575	2108
(I) Electric Panel Width	IN	14	14	14	14	14	14	17	17	32	32	40	52	64	64	64
	MM	356	356	356	356	356	356	432	432	813	813	1016	1321	1626	1626	1626
(J) Boiler Width Overall	IN	33	33	33	33	33	33	35	42	42	46	52	56	64	72	91
	MM	838	838	838	838	838	838	889	1067	1067	1168	1321	1422	1625	1829	2311
Minimum Clearances																
(K) Horizontal	IN	14	14	14	14	14	14	--	--	--	--	--	--	--	--	--
to remove elements	MM	356	356	356	356	356	356	--	--	--	--	--	--	--	--	--
(L) Floor to Ceiling	IN	--	--	--	--	--	--	95	95	95	95	95	139	139	139	139
to remove elements	MM	--	--	--	--	--	--	2413	2413	2413	2413	2413	3531	3531	3531	3531
(M) Front of Boiler	IN	24	24	24	24	24	24	24	32	32	32	34	34	36	36	36
	MM	610	610	610	610	610	610	610	813	813	813	864	864	914	914	914
(N) Sides & Rear of Boiler	IN	12	12	12	12	12	12	12	12	12	12	24	24	24	24	24
	MM	305	305	305	305	305	305	305	305	305	305	610	610	610	610	610

Dimensions are approximate. We reserve the right to change specifications.
–Indicates not available.
Panel Box size may change depending on voltage.

Models FB-L 012-036

12 to 36 kW (1.2 to 3.6 BHP)

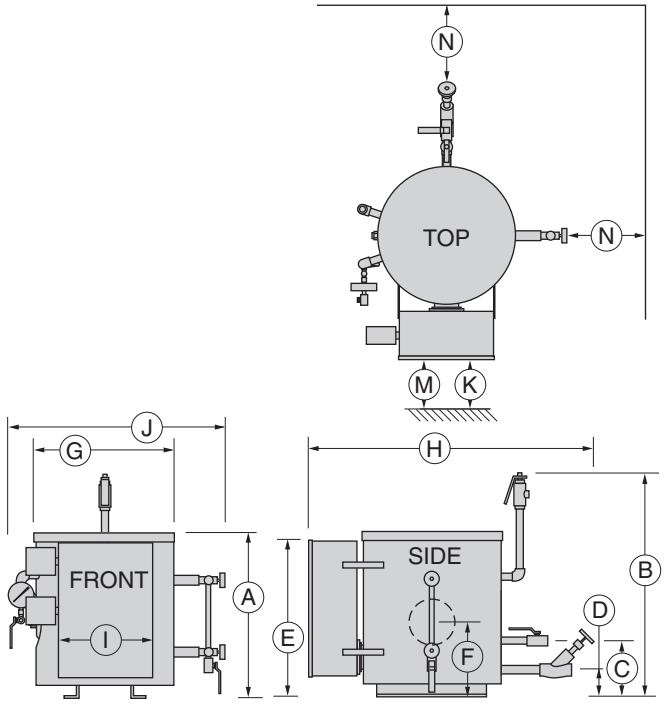

Models FB-L 050-1000

50 kW to 1000 kW (5-100 BHP)

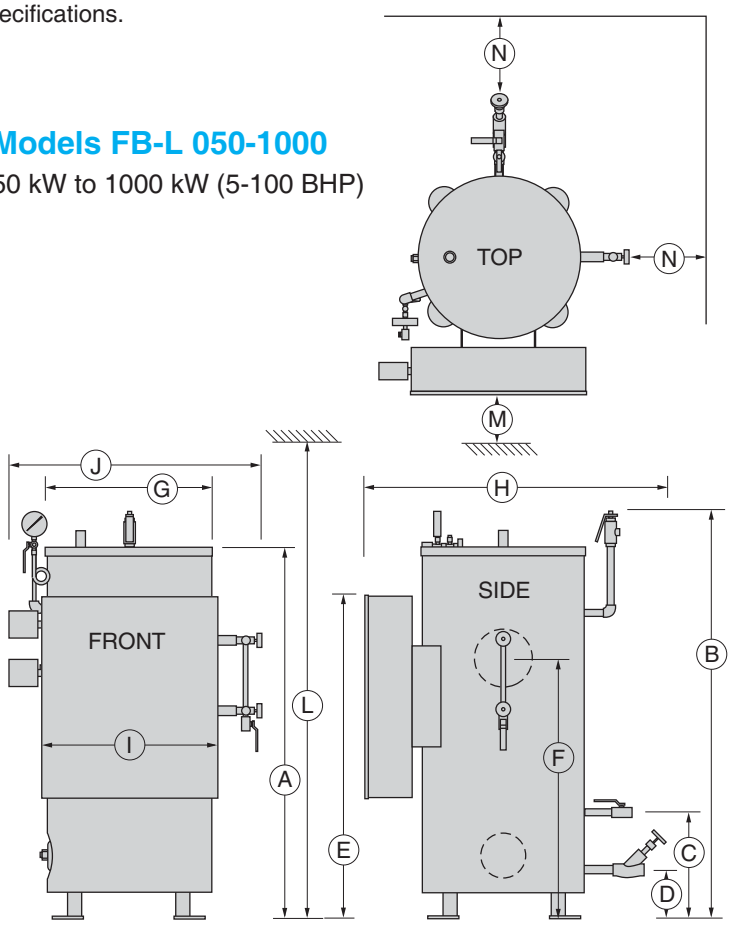

Specifications

Model FB-L		012	015	018	024	030	036	050	075	100	150	200	300	500	750	1000
Number of Elements		1	1	1	2	2	2	2	3	4	6	4	4	7	10	14
Output	1000 BTU/HR	41	51	61	82	102	123	171	256	341	512	683	1025	1708	2561	3416
	1000 KCAL/HR	10	13	15	21	26	31	43	64	86	129	172	258	430	645	860
Steam Output**	LB/HR	40	50	60	81	101	121	169	252	336	505	674	1011	1684	2526	3368
	KG/HR	18	23	27	37	46	55	77	115	153	230	306	460	765	1148	1530
Approx. Shipping Weight	LB	420	420	420	440	450	450	580	850	970	1225	1380	1440	1850	2150	2300
	KG	191	191	191	200	204	204	263	386	440	556	623	655	839	977	1043
Water Capacity	GALLONS	7	7	7	7	7	7	13	39	39	50	79	115	195	270	360
	LITERS	26	26	26	26	26	26	49	148	148	189	299	435	738	1022	1362
Boiler Connection Sizes																
Steam Outlet 15 PSI	IN	.75	.75	.75	.75	.75	.75	1	1.5	1.5	2	3	3	4	4	6
	MM	19	19	19	19	19	19	25	38	38	51	76	76	100	100	150
Steam Outlet 16-300 PSI	IN	75	.75	.75	.75	.75	.75	.75	1	1	1.25	1.5	2	3	3	3
	MM	19	19	19	19	19	19	19	25	25	32	38	51	76	76	76
Feedwater Inlet	IN	.75	.75	.75	.75	.75	.75	.75	1	1	1	1	1	1	1	1.25
	MM	19	19	19	19	19	19	19	25	25	25	25	25	25	25	32
Blowdown Outlet	IN	1	1	1	1	1	1	1	1	1	1	1.25	1.25	1.5	1.5	2
	MM	25	25	25	25	25	25	25	25	25	25	32	32	38	38	51
Water Col. Blowdown Outlet	IN	NA	NA	NA	NA	NA	NA	NA	NA	NA	NA	NA	.75	.75	.75	75
	MM	--	--	--	--	--	--	--	--	--	--	--	19	19	19	19
Sight Glass Blowdown Outlet	IN	.25	.25	.25	.25	.25	.25	.25	.25	.25	.25	.25	.25	.25	.25	.25
	MM	6	6	6	6	6	6	6	6	6	6	6	6	6	6	6
Safety Valve 15 PSI	IN	.75	.75	.75	.75	.75	.75	1	1	1	1.25	1.50	1.5	1.5	2	2.5
	MM	19	19	19	19	19	19	25	25	25	32	38	38	38	51	64
Safety Valve 16-300 PSI	IN	.50	.50	.50	.50	.50	.50	.75	.75	.75	.75	1	1	1.25	1.5	2
	MM	13	13	13	13	13	13	19	19	19	19	25	25	32	38	51
Electrical Power Requirements (In Amps)																
208V 3 Phase		34	42	50	67	84	100	139	208	278	416	556	832	*	*	*
230V 1 Phase		52	65	78	--	--	--	--	--	--	--	--	--	--	--	--
230V 3 Phase		30	35	46	60	76	92	126	188	252	378	512	756	*	*	*
460V 3Phase		15	19	23	30	38	46	63	94	126	189	256	378	630	941	1260
575V 3 Phase		13	16	18	24	30	36	50	76	101	150	201	301	502	756	1004

Dimensions are approximate. We reserve the right to change specifications.
Voltage applied higher than above ratings will result in higher amp draws.

Probe liquid level control is standard on all units.

Optional Water Level Controls
McDonnell Miller 53-2
McDonnell MIller 157 - 157M

Notes:
--Indicates not available.
* Indicates voltages available at special request.
**Steam output ratings, at 180ºF (82ºC) feedwater temperature,(0 PSIG).

Standard Electrical Control Panel Components

- Low Water Relay
- Water Level Relay
- High Limit Pressure Control Switch w/manual reset
- Operating Pressure Control Element Contactor(s) Switch
- Pump Starter (1 phase)
- Power Switch
- Power Lamp
- Element Energized Lamp
- CSD-1 Low Water Relay With Manual Reset

Models FB-L 100 to FB-L 1000 include a step sequencer.

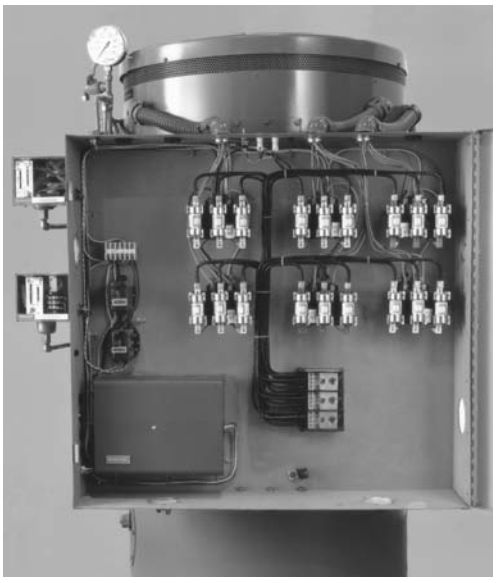

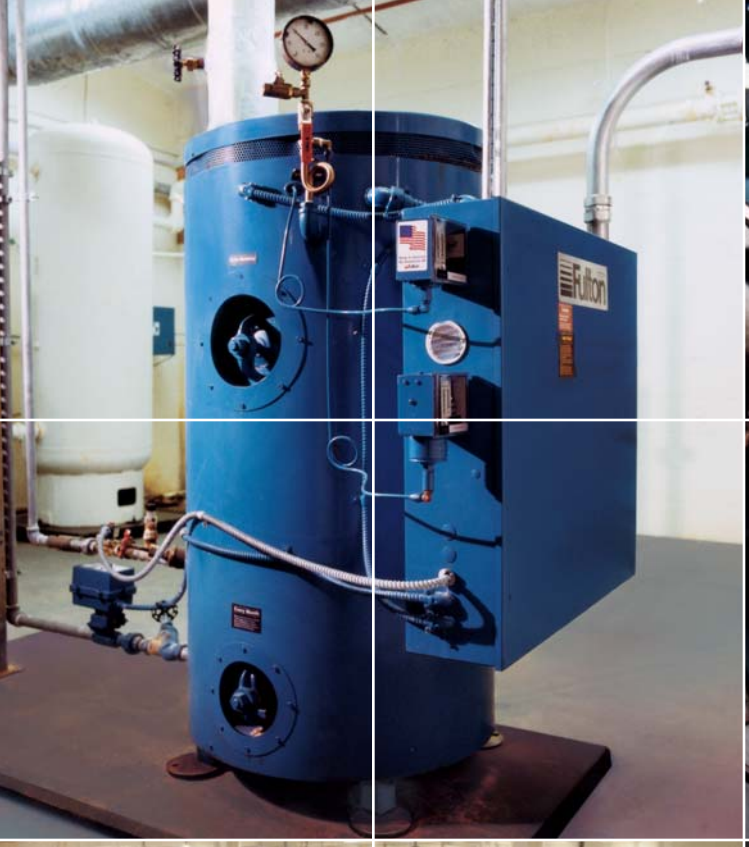

Applications - Pressing operations in drycleaning and tailor shops, food, chemical, pharmaceutical, plastics processing, sterilization, humidification control anywhere heat/steam is needed.

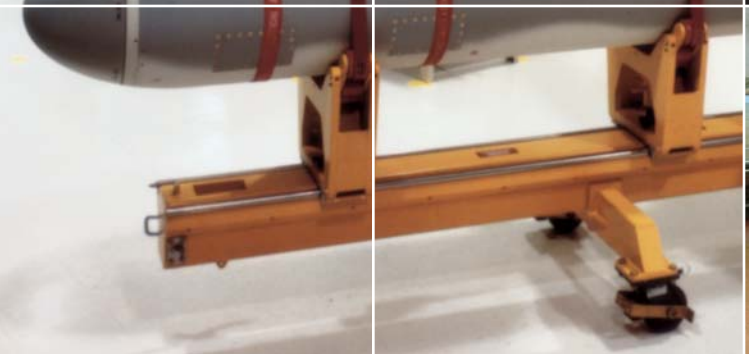

Fulton®

The Fulton Companies
972 Centerville Road
Pulaski, NY 13142

Call: (315) 298-5121
Fax: (315) 298-6390
www.fulton.com

Fulton is a global manufacturer of steam,
hot water & thermal fluid heat transfer systems

2009-1113
Electric BRO